Detail AB
Scale: 1:10

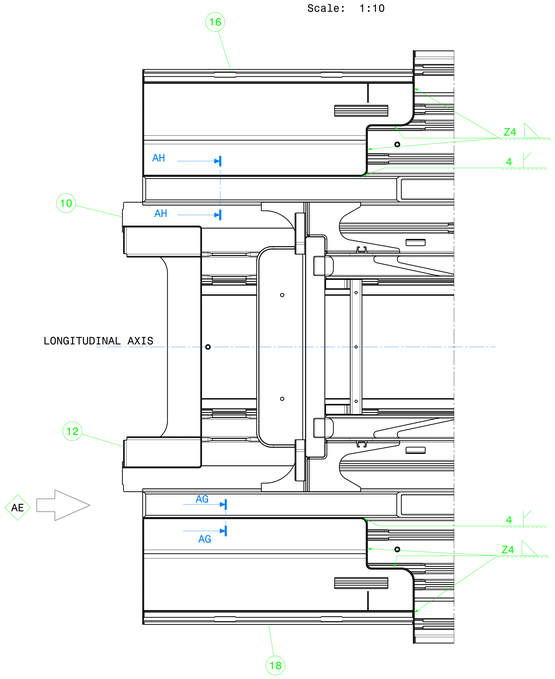

Section cut AH-AH
Scale: 1:2
Typical Rotate 90°

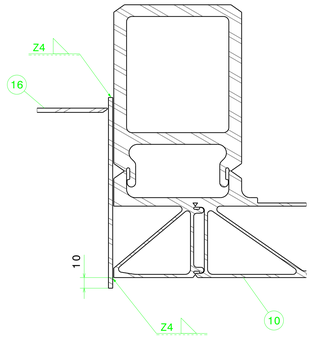

Section cut AG-AG
Scale: 1:2
Typical Rotated 90°

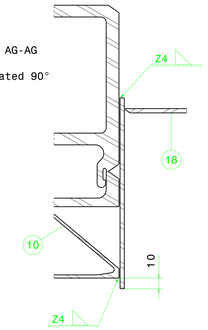

Detail Z
Scale: 1:10

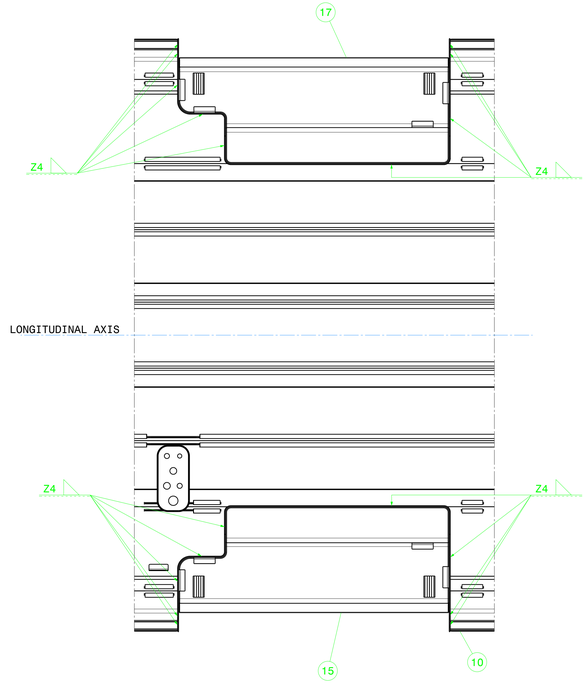

View From AE
Scale: 1:2
Typical

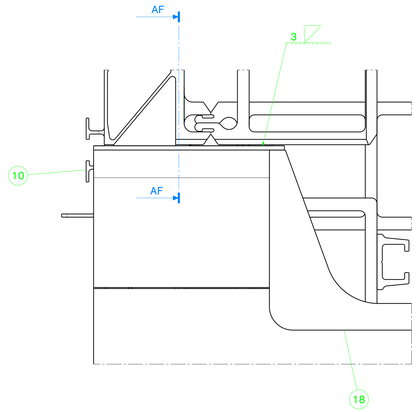

Section cut AF-AF
Scale: 1:1
Typical

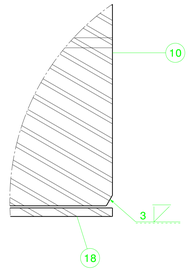

Detail AA
Scale: 1:10

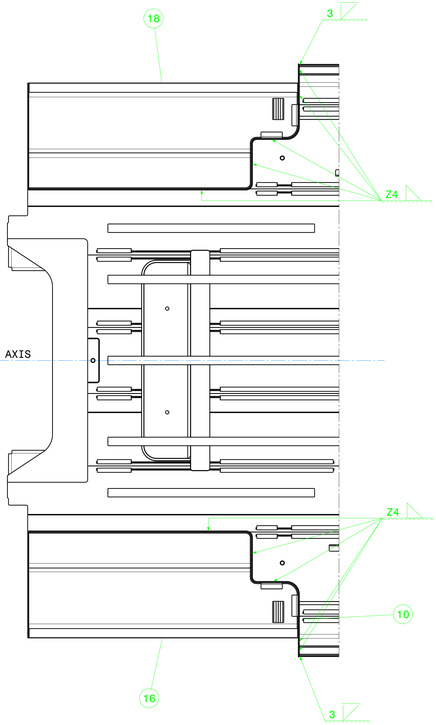

Detail AC
Scale: 1:10

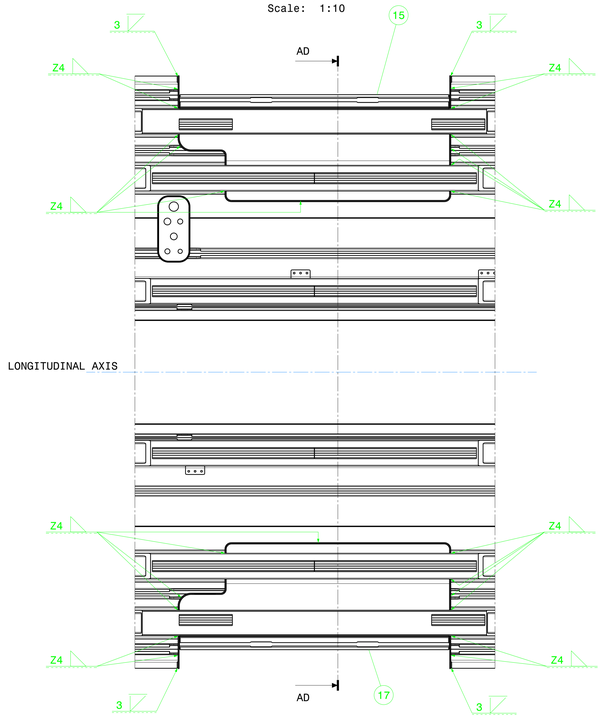

Section cut AD-AD
Scale: 1:10
Rotated 90°

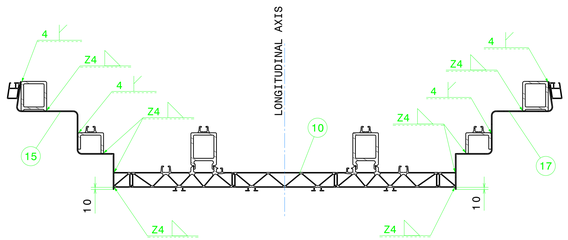

ISO 13920 Welded Construction			
	L mm	A ±	E ±
	Nom. Size	Class	
	<1000	6,0	0,8
	<630	4,0	0,7
	<400	3,0	0,6
	<250	3,0	0,4
	100	2,0	0,3
	40	1,5	0,2

ISO 2768 General Tolerances			
	L mm	m ±	K ±
	Nom. Size	Class	
	>20000	9,0	8,0
	<20000	8,0	7,0
	<16000	7,0	6,0
	<12000	6,0	5,0
	<8000	5,0	4,0
	<4000	4,0	3,0
	<2000	3,0	2,0
	<1000	2,0	1,5
	<400	1,0	1,0
	30-120	1,0	0,5
	2-30	1,0	0,5

EN 10204 Cast Steel			
	L mm	Hard.	Ypl.
	Nom. Size	Class	
	<4000	2,0	0,4
	<2000	1,2	0,4
	<1000	0,8	0,3
	<400	0,5	0,3
	30-120	0,3	0,2
	2-30	0,2	0,1

Reproduction, dissemination or use of this document or its all contents in any form without the prior written permission of TURASAS is prohibited. Offenders will be liable for the payment of damages. All rights reserved in the event of the grant of a patent, utility model or design registration.

Technical Specifications					
Technical Document					
Fixture/Mould Asset ID.					
Coating/Heat Tre./Roughness		R01	Missing weld symbols and section views have been added.	27/01/2026	E.M.ERDOĞAN
Paint/Color	-	Modif. No	Modification Description	Date	Sign.

TYP

4130,4

No	Parça Adı / Designation Name of Item	Adet / Qty.	Resim No / Norm / Drawing No / Norm	Malzeme / Material	Ölçü / Dimension	Ağırlık / Weight (Kg)
	ISO 1302 ISO 8015	EN 22553	General Tol.	ISO 2768 f ☐	m☐ H☐	K☐
	EN 15085-2 Certification Level	CL1☒ CL2☐ CL3☐ CL4☐	Weld Pro.	ISO 13920 A☒	B☐ E☒	F☐
			Cast Steel	ISO 12708 Lm☒	Lr2☐ Sm2☐	Sr2☐

Approved	E.M. ERDOĞAN	Scale	1:25
Checked	Y. KARABEL		
Prepared	M.K. TAŞ		

Complete_Underframe

-

TURASAS
Türkiye Rayli Sistem Araçları San. A.Ş.

FT20.03.01.00000

Date:02.07.2024 | Sheet : 4/4 | Size:A0 | Rev: 01